Faster remote graphical interfaces with VNC

Ramses van Zon

SciNet HPC Consortium

14 December 2012

Graphics on SciNet

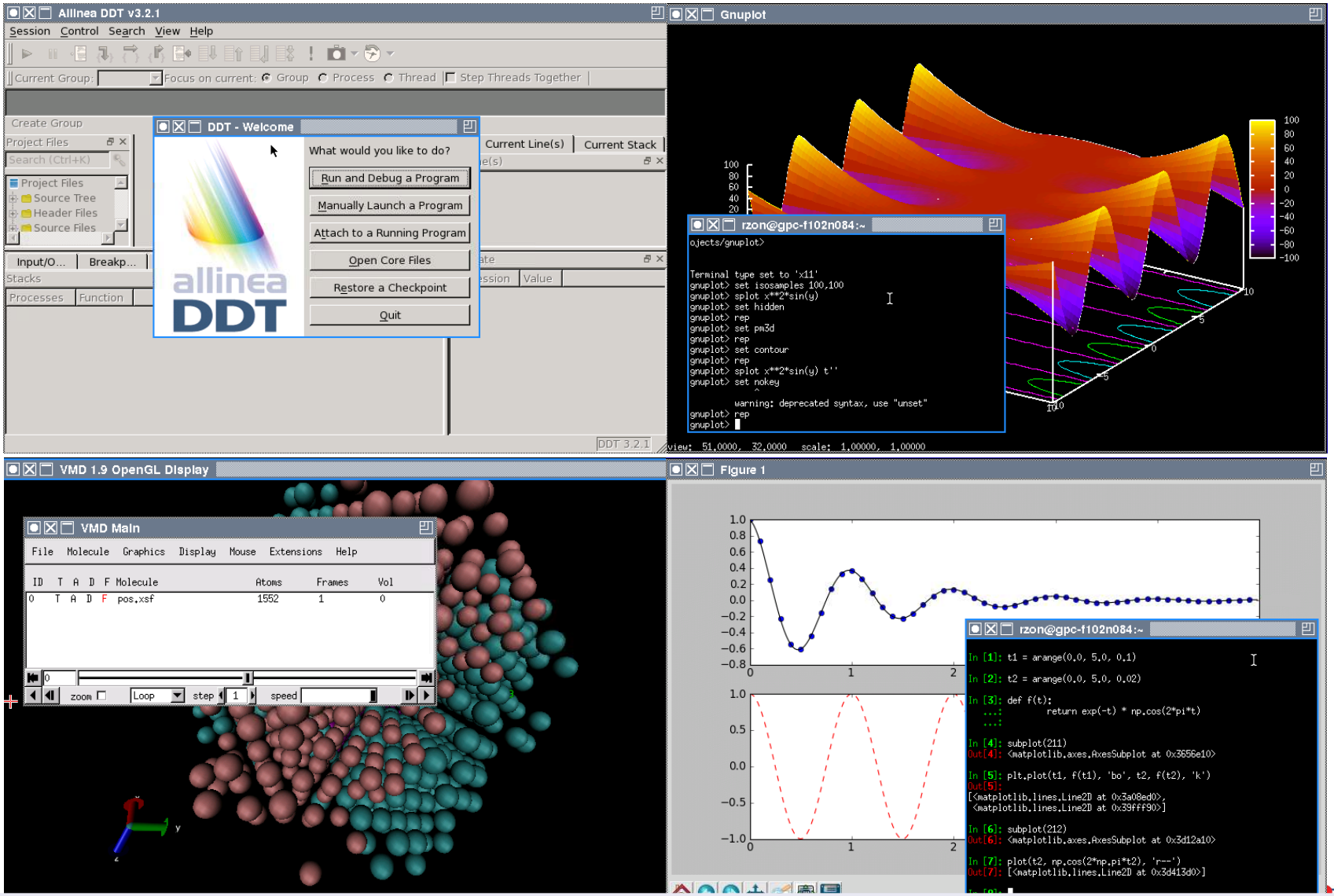

Even at SciNet interactive graphics are sometimes useful.

Graphics on SciNet

- One can use ssh X forwarding if an X server has been installed locally (for Linux and MacOS this is often already there by default):

```
$ ssh -X login.scinet.utoronto.ca
$ ssh -X gpc02
```

- This can be slow on low-bandwidth/high-latency connections such as home internet connections.
- VNC offers a more suitable protocol for such remote connections.

What is VNC?

- VNC = Virtual Network Computing
- VNC behaves as if taking continuous desktop snapshots.
- It uses compression techniques to reduce the required bandwidth, and transfers only the parts of the desktop that are changed.
- Using VNC with an SSH tunnel and a password is quick and secure.

SciNet compute • calcul CANADA

Why use VNC instead of X tunneling?

Often X is just fine, but:

- Remote X graphics applications require a local X server and transmit many little events and data messages. On a network with high latency, the number of roundtrips needed makes X slow and less responsive.
- VNC typically requires fewer roundtrip is often more responsive.
- X's speed depends more on the type of application than VNC. (E.g. java applications tend to be very slow over X, but are okay over VNC).
- VNC has some convenient additional functionality, such as view-only connections, file transfer, scaled remote displays, ...

SciNet compute • calcul CANADA

What does it look like?

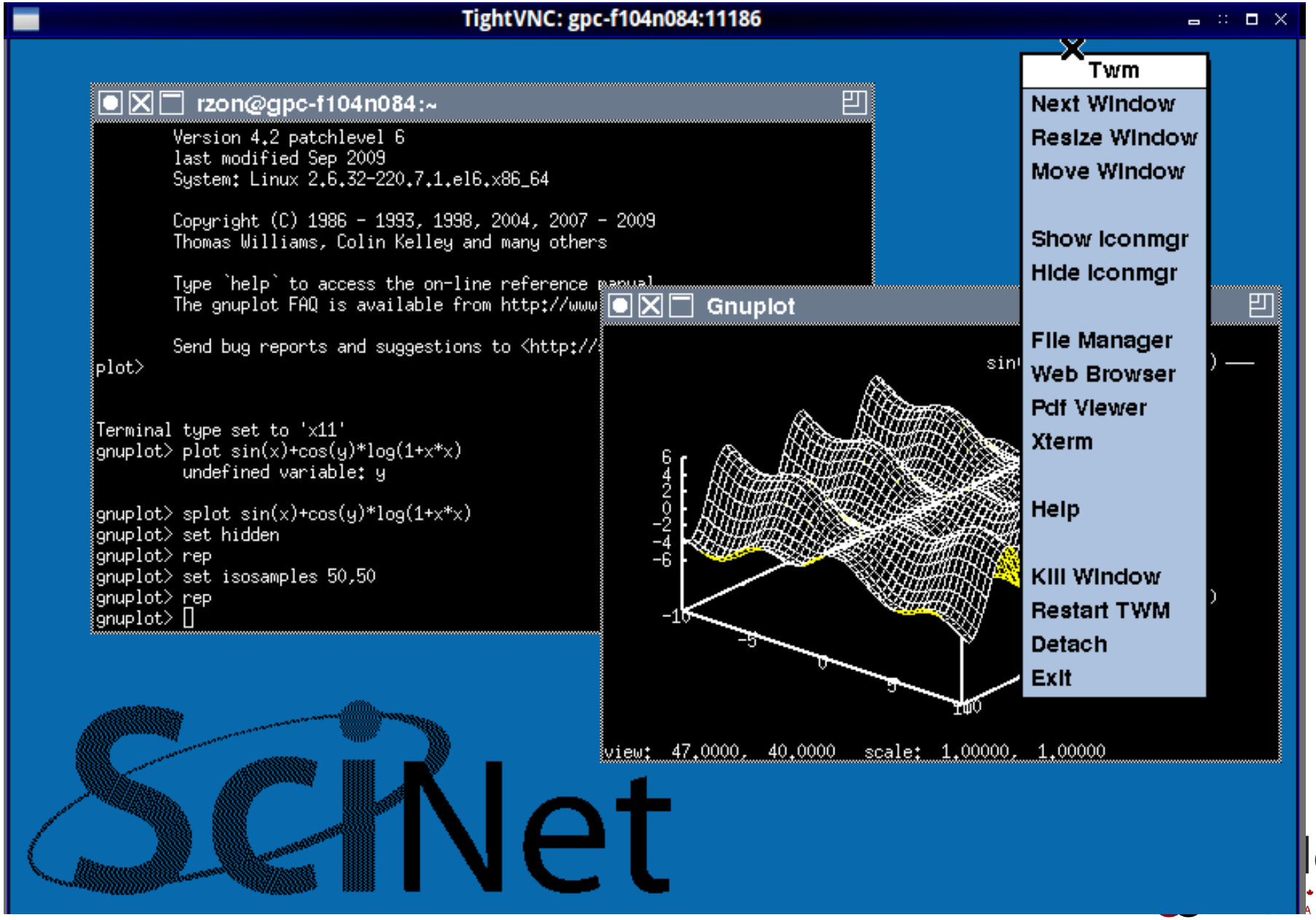

What does it look like behind the scenes?

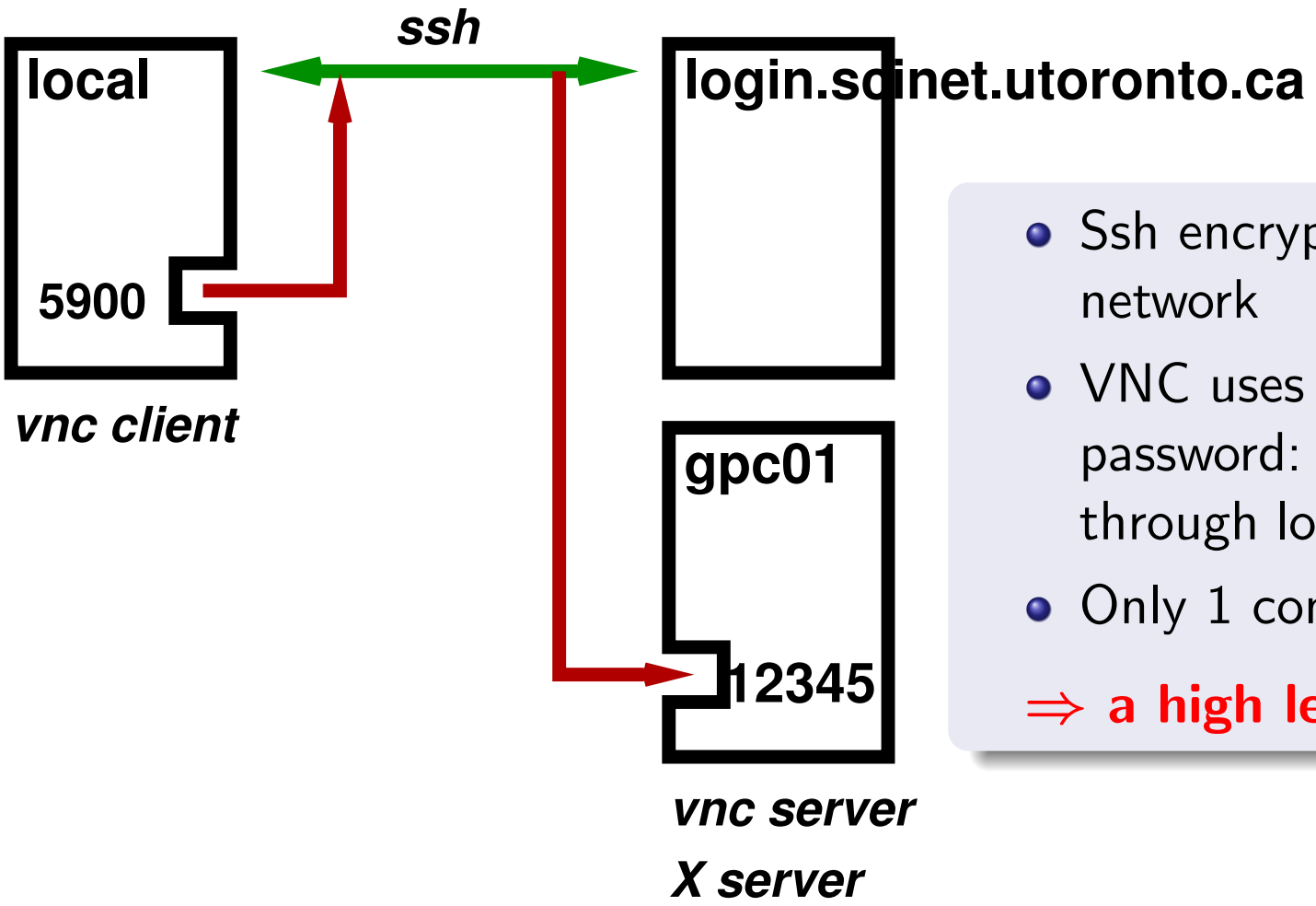

- Ssh encrypts: secure over network
- VNC uses additional password: no exposure through local or remote port.
- Only 1 connection allowed.

⇒ **a high level of security**

Prerequisites

On your local machine:

- Install a VNC client on your local machine.
  TightVNC clients are a good option.
- Install an ssh client.
  On Windows, you can install PuTTY, MobaXterm, or Cygwin.
  Linux and Mac include an ssh client.

On the GPC:

- The VNC server and scripts are in the module **`vnc`**.
- This module requires the **`Xlibraries`** module.
- You can add **`module load Xlibraries vnc`** to the .bashrc.

SciNet compute • calcul CANADA

Setting up the VNC session

STEP 1: Start the VNC server on a GPC devel node

STEP 2: SSH tunnel from your local machine to the GPC

STEP 3: Start the VNC client

SciNet compute • calcul CANADA

STEP 1: Start the VNC session

- First connect with ssh to login.scinet.utoronto.ca
- Once you get a prompt, ssh further to gpc01, gpc02, gpc03 or gpc04.
- Then type

```
$ module load Xlibraries vnc
$ vnc start
```

  The command will ask for a password to use (don't leave this blank!)
- Note down the port number that this command prints out.

Alternative

- Have **`module load Xlibraries vnc`** in your **`.bashrc`**.
- From a terminal, type

  `ssh login.scinet.utoronto.ca ssh gpc01 vnc start`
- This starts the VNC server, shows the **`PORT`** and waits.

STEP 2: Setup a secure SSH tunnel

- All external traffic has to go through ssh to login.scinet.utoronto.ca.
- Luckily, ssh has a feature called port forwarding, which can take a port on your local machine and forward it to the port on the devel node that the VNC server is listening to:

  $ **ssh login.scinet.utoronto.ca -L5900:gpc01:PORT -N**

- This assumes the VNC server runs on gpc01, and uses the value **PORT** for the port number that **vnc start** returned.
- Do not exit this shell, or the tunnel will collapse.

TIP

All communication will go through the tunnel, which should be as fast as possible. Consider using the following extended ssh command:

$ **ssh -C -c arcfour login.scinet.utoronto.ca -L5900:gpc01:PORT -N**

compute • calcul CANADA

STEP 3: Starting the VNC client

- Any local VNC viewer can now attach to the remote VNC server, e.g.

  $ **vncviewer localhost:5900**

- Type in the password for the VNC server.
- You will get a 'desktop' with an Xterm
  (more about the environment later)

TIP

For efficiency, consider explicitly requesting encodings, e.g.:

$ **vncviewer -encodings 'copyrect tight hextile' localhost:5900**

or

$ **vncviewer -PreferredEncoding 'copyrect tight hextile' localhost:5900**

STEP 2+3: Combined using TightVNC

One can combine steps 2+3 when using the TightVNC viewer

```
$ vncviewer -via login.scinet.utoronto.ca gpc03:PORT
```

or

```
$ vncviewer -via login.scinet.utoronto.ca gpc03:ALTPORT
```

where **ALTPORT**=**PORT**-5900.

TIP

- To control compression for TightVNC's combined steps 2+3, can set the environment variable **VNC_VIA_CMD**, e.g.

```
$ export VNC_VIA_CMD='ssh -C -c arcfour -f -L %L:%H:%R %G sleep 20'
```

What do you get?

TightVNC: gpc-f102n084:11186

rzon@gpc-f102n084:~

```
Currently Loaded Modulefiles:
  1) gcc/4.6.1                  5) Xlibraries/X11-64
  2) intel/12.1.3               6) gnu-parallel/20121022
  3) intelmpi/4.0.3.008         7) use.experimental
  4) extras/64                  8) vnc/Xfvb+x11vnc
gpc-f102n084:~$
```

SciNet

Client-side usage

You're in, now what?

The light-weight window manager twm has been pre-configured for GPC:

- Xterm is started by default.
- Icon, close, maximize and resize buttons are found in title bars.
- Ctrl-Tab brings successive windows to the foreground.
- A left mouse click on the background pops up the twm menu.

Important: Use the 'Exit' option from the twm menu to terminate VNC.

Implementation

- Xvfb for the X server
- x11vnc for the VNC server.

compute • calcul CANADA

Client-side demonstration

Server-side usage

vnc stop Stop the VNC and X servers, killing any X applications.

vnc status Probes whether the VNC server and the X server are running.

vnc detach Restarts the VNC server while keeping the X server and all applications running. The VNC client will disconnect, but a new connection can be made from anywhere.
This option is in the twm menu as well.

vnc help Display a help message about the VNC/X/twm environment.
This option is in the twm menu as well.

vnc start Has a number of additional options:

```
-r RESOLUTION   Set X's resolution (default:800x544x16)
-s FRACTION     Use x11vnc's scaling feature
-v 0|1|any      Also attach a viewer
-n              Switch on x11vnc's ncache feature
-b              Blank background
```

Server-side files and directories

`~/.xinitrc`	Initialization of X: start window manager twm and xterm.
`~/.twmrc`	Settings file for the window manager twm
`~/.vnc`	Directory with encrypted VNC passwords and other settings.
`~/.fr`	Directory with settings for FileRunner.

SciNet compute • calcul CANADA

Server-side demonstration

Limitations

- Closing the VNC viewer window instead of using Exit in the twm menu keeps the X server running on the devel node without VNC reconnectivity.
- No VNC server on compute nodes.
  But you can X forward from within VNC to a compute node on which you've got a job running.
- Client-side caching is supported by x11vnc and invoked with **`vnc start -n`**, but the buffers are visible in the client.
- Not on the tcs, p7, arc, or bgq.

SciNet compute • calcul CANADA